QUAKER WINDOW PRODUCTS

C700/C705 SERIES ONE-TONE AWNING WINDOW (WZ3)(IMPACT)

GENERAL NOTES:

1. THE PRODUCT SHOWN HEREIN IS DESIGNED AND MANUFACTURED TO COMPLY WITH THE CURRENT EDITION OF THE FLORIDA BUILDING CODE (FBC), **EXCLUDING** HVHZ AND HAS BEEN EVALUATED ACCORDING TO THE FOLLOWING:
   - AAMA 506-16
   - ASTM E1886-13a
   - ASTM E1996-17
2. ADEQUACY OF THE EXISTING STRUCTURAL CONCRETE/MASONRY, 2X FRAMING, AND METAL FRAMING AS A MAIN WIND FORCE RESISTING SYSTEM CAPABLE OF WITHSTANDING AND TRANSFERRING APPLIED PRODUCT LOADS TO THE FOUNDATION IS THE RESPONSIBILITY OF THE ENGINEER OR ARCHITECT OF RECORD FOR THE PROJECT OF INSTALLATION.
3. 1X AND 2X BUCKS (WHEN USED) SHALL BE DESIGNED AND ANCHORED TO PROPERLY TRANSFER ALL LOADS TO THE STRUCTURE. BUCK DESIGN AND INSTALLATION IS THE RESPONSIBILITY OF THE ENGINEER OR ARCHITECT OF RECORD FOR THE PROJECT OF INSTALLATION.
4. INSTALL INDIVIDUAL INSTALLATION ANCHORS WITHIN A TOLERANCE OF ±1/4 INCH OF THE DEPICTED LOCATION IN THE ANCHOR LAYOUT DETAIL (I.E., WITHOUT CONSIDERATION OF TOLERANCES). TOLERANCES ARE NOT CUMULATIVE FROM ONE INSTALLATION ANCHOR TO THE NEXT.
5. THE INSTALLATION DETAILS DESCRIBED HEREIN ARE GENERIC AND MAY NOT REFLECT ACTUAL CONDITIONS FOR A SPECIFIC SITE. IF SITE CONDITIONS CAUSE INSTALLATION TO DEVIATE FROM THE REQUIREMENTS DETAILED HEREIN, A LICENSED ENGINEER OR ARCHITECT SHALL PREPARE SITE SPECIFIC DOCUMENTS FOR USE WITH THIS DOCUMENT.
6. APPROVED IMPACT PROTECTIVE SYSTEM **IS NOT REQUIRED** ON THIS PRODUCT IN AREAS REQUIRING IMPACT RESISTANCE IN WIND ZONE 3 OR LESS.
7. APPROVED IMPACT PROTECTIVE SYSTEM **IS REQUIRED** ON THIS PRODUCTS IN AREAS REQUIRING IMPACT RESISTANCE IN WIND ZONE 4.
8. WINDOW FRAME MATERIAL: ALUMINUM 6063-T6
9. GLASS MEETS THE REQUIREMENTS OF ASTM E1300 GLASS CHARTS. SEE SHEET 1 FOR GLAZING DETAILS.

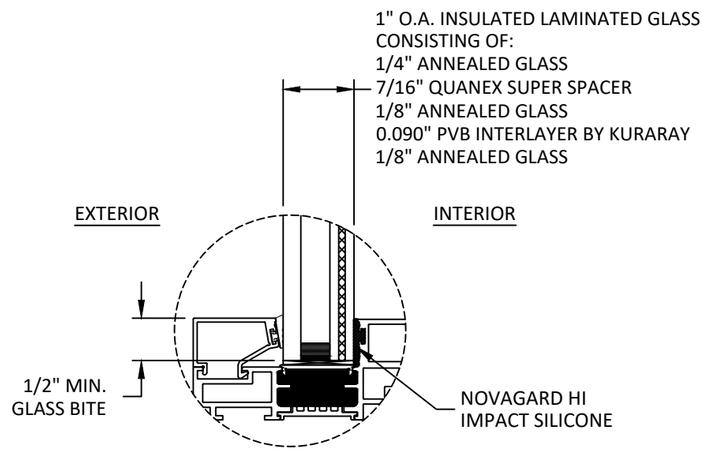

GLAZING DETAIL 1

C700

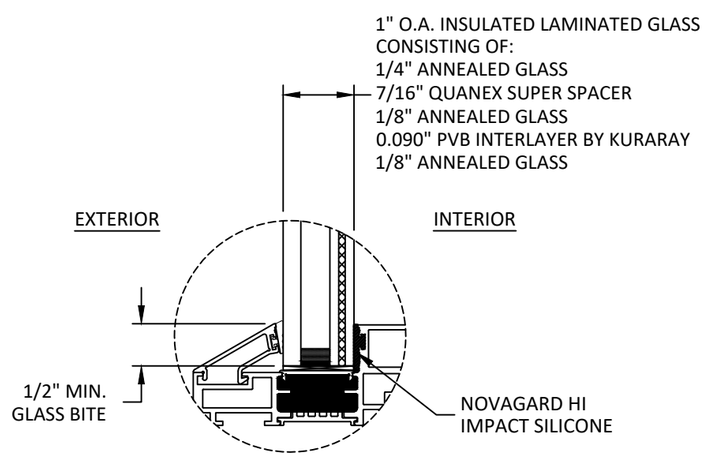

GLAZING DETAIL 2

C705

TABLE OF CONTENTS

SHEET	SHEET DESCRIPTION
1	GENERAL NOTES AND GLAZING DETAILS
2	ELEVATION & HARDWARE LAYOUT
3	ANCHOR LAYOUTS
4	VERTICAL SECTIONS
5	HORIZONTAL SECTIONS
6	ANCHOR DETAILS AND INSTALLATION NOTES

DESIGN PRESSURE RATING (PSF)

CONFIGURATION	WIDTH (IN.)	HEIGHT (IN.)	DESIGN PRESSURE	MISSILE IMPACT RATING
X	60.0	48.0	+70/-70	LARGE & SMALL MISSILE IMPACT

GLAZING NOTES:

1. GLASS TYPE COMPLIES WITH ASTM E1300 REQUIREMENTS. PER THE FBC TEMPER AND SAFETY GLAZING REQUIREMENTS SHALL BE REVIEWED ON A SITE SPECIFIC BASIS.
2. SETTING BLOCK DUROMETER HARDNESS OF 70-90 (SHORE A) AS REFERENCED IN FBC CHAPTER 24.
3. SETTING BLOCKS TO BE LOCATED AT 1/4 SPAN LENGTH FOR GLASS WIDER THAN 36" AS PER FBC CHAPTER 24.
4. D.L.O. AND DESIGN PRESSURES MAY NOT EXCEED MAX VALUES SHOWN HEREIN.

QUAKER COMMERCIAL
PO BOX 128
504 HIGHWAY 63 SOUTH
FREEBURG, MO 65035
PH: (573) 744-5211 FX: (573) 744-5822

TITLE: *C700/C705 SERIES ONE-TONE AWNING WINDOW (WZ3)(IMPACT)*

GENERAL NOTES & GLAZING DETAILS

PREPARED BY:
BUILDING DROPS, INC.
1900 NE MIAMI COURT, STE. 2-15
MIAMI, FL 33132
PH: (954)399-8478
FAX: (954)744.4738
WEB: www.buildingdrops.com

REMARKS	BY	DATE

THE INSTALLATION DETAILS DESCRIBED HEREIN ARE GENERIC AND MAY NOT REFLECT ACTUAL CONDITIONS FOR A SPECIFIC SITE. IF SITE CONDITIONS CAUSE INSTALLATION TO DEVIATE FROM THE REQUIREMENTS DETAILED HEREIN, A LICENSED ENGINEER OR ARCHITECT SHALL PREPARE SITE SPECIFIC DOCUMENTS FOR USE WITH THIS DOCUMENT.

Digitally signed by Hermes F. Norero, P.E.
Reason: I am approving this document
Date: 2025.08.13 10:07:05 -04'00'

HERMES F. NORERO
LICENSE
No. 73778
STATE OF
FLORIDA
PROFESSIONAL ENGINEER

HERMES F. NORERO, P.E.
REGISTRATION NUMBER 73778
BUILDING DROPS, INC
1900 NE MIAMI COURT, STE. 2-15
MIAMI, FL 33132
FBPE CERT. OF AUTHORIZATION No. 29578

FL #: FL47696

DATE: 06.29.2025

DWG. BY: SH

CHK. BY: HFN

SCALE: NTS

DWG. #: QWP027

SHEET: 1 OF 6

8/11/2025 9:12 AM
c:\users\sebastianherreros\building drops, inc\building drops landing - common\projects\quaker window products\fbc-25-0533.2 - fbc submittal - c700, c705 & w700,w705 aluminum awning window\dwgs\qwp027.dwg

8/11/2025 9:12 AM
c:\users\sebastianherreros\building drops, inc\building drops landing - common\projects\quaker window products\fbc-25-0533.2 - fbc submittal - c700, c705 & w700,w705 aluminum awning window\dwgs\qwp027.dwg

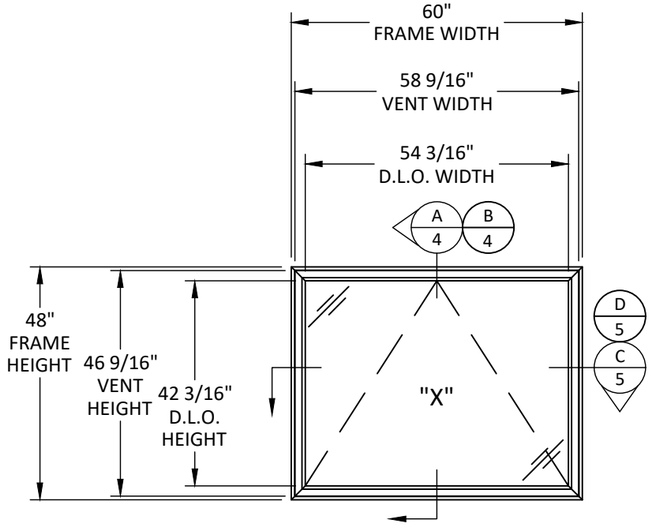

ELEVATION

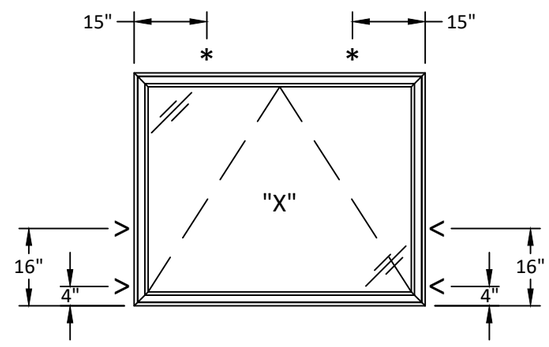

HARDWARE LAYOUT

HARDWARE NOTES:
* = SNUBBER LOCATION
< = LOCKING POINT

QUAKER
COMMERCIAL
PO BOX 128
504 HIGHWAY 63 SOUTH
FREEBURG, MO 65035
PH: (573) 744-5211 FX: (573) 744-5822

TITLE: *C700/C705 SERIES ONE-TONE AWNING WINDOW (WZ3)(IMPACT)*
ELEVATION & HARDWARE LAYOUT

PREPARED BY:
BUILDING DROPS, INC.
1900 NE MIAMI COURT, STE. 2-15
MIAMI, FL 33132
PH: (954)399-8478
FAX: (954)744.4738
WEB: www.buildingdrops.com
BUILDING DROPS

REMARKS	BY	DATE

THE INSTALLATION DETAILS DESCRIBED HEREIN ARE GENERIC AND MAY NOT REFLECT ACTUAL CONDITIONS FOR A SPECIFIC SITE. IF SITE CONDITIONS CAUSE INSTALLATION TO DEVIATE FROM THE REQUIREMENTS DETAILED HEREIN, A LICENSED ENGINEER OR ARCHITECT SHALL PREPARE SITE SPECIFIC DOCUMENTS FOR USE WITH THIS DOCUMENT.

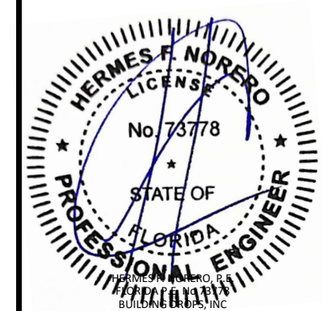

HERMES F. NORERO, P.E.
FLORIDA P.E. No. 73778
BUILDING DROPS, INC
1900 NE MIAMI COURT, STE. 2-15
MIAMI, FL 33132
FBPE CERT. OF AUTHORIZATION No. 29578

FL #: FL47696

DATE: 06.29.2025

DWG. BY: SH | CHK. BY: HFN

SCALE: NTS

DWG. #: QWP027

SHEET: 2 OF 6

8/11/2025 9:12 AM
c:\users\sebastianherreros\building drops, inc\building drops landing - common\projects\quaker window products\fbc-25-0533.2 - fbc submittal - c700, c705 & w700,w705 aluminum awning window\dwgs\qwp027.dwg

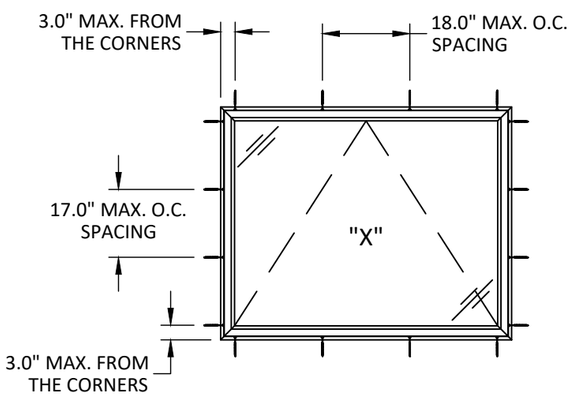

ANCHOR LAYOUT
NAIL FIN INSTALLATION

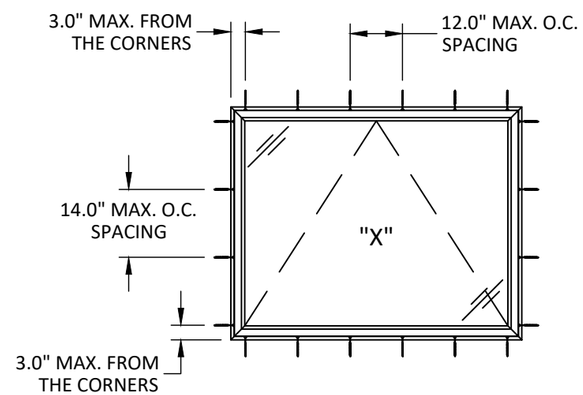

ANCHOR LAYOUT
TRIM CLIP INSTALLATION

QUAKER COMMERCIAL
PO BOX 128
504 HIGHWAY 63 SOUTH
FREEBURG, MO 65035
PH: (573) 744-5211 FX: (573) 744-5822

TITLE: *C700/C705 SERIES ONE-TONE AWNING WINDOW (WZ3)(IMPACT)*

ANCHOR LAYOUTS

PREPARED BY:
BUILDING DROPS, INC.
1900 NE MIAMI COURT, STE. 2-15
MIAMI, FL 33132
PH: (954)399-8478
FAX: (954)744.4738
WEB: www.buildingdrops.com
BUILDING DROPS

REMARKS	BY	DATE

THE INSTALLATION DETAILS DESCRIBED HEREIN ARE GENERIC AND MAY NOT REFLECT ACTUAL CONDITIONS FOR A SPECIFIC SITE. IF SITE CONDITIONS CAUSE INSTALLATION TO DEVIATE FROM THE REQUIREMENTS DETAILED HEREIN, A LICENSED ENGINEER OR ARCHITECT SHALL PREPARE SITE SPECIFIC DOCUMENTS FOR USE WITH THIS DOCUMENT.

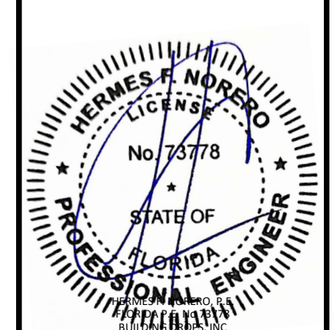

HERMES F. NORERO, P.E.
FLORIDA P.E. No. 73778
BUILDING DROPS, INC
1900 NE MIAMI COURT, STE. 2-15
MIAMI, FL 33132
FBPE CERT. OF AUTHORIZATION No. 29578

FL #: FL47696

DATE: 06.29.2025

DWG. BY: SH | CHK. BY: HFN

SCALE: NTS

DWG. #: QWP027

SHEET: 3 OF 6

8/11/2025 9:12 AM
c:\users\sebastianherreros\building drops, inc\building drops landing - common\projects\quaker window products\fbc-25-0533.2 - fbc submittal - c700, c705 & w700,w705 aluminum awning window\dwgs\qwp027.dwg

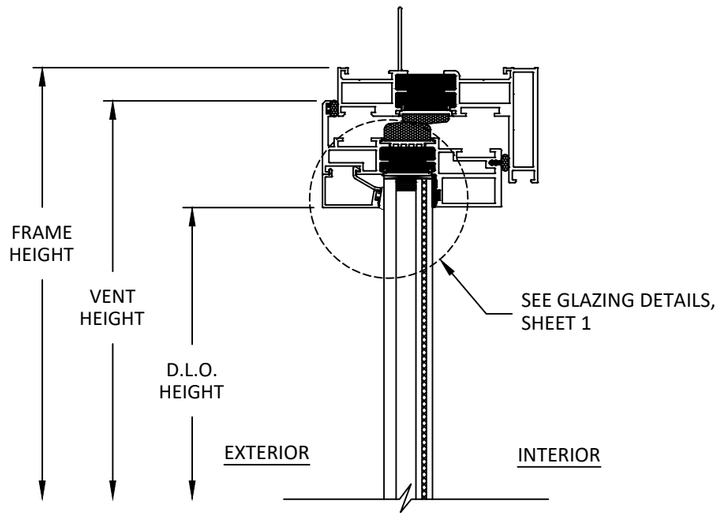

A/4 VERTICAL SECTION
FIN

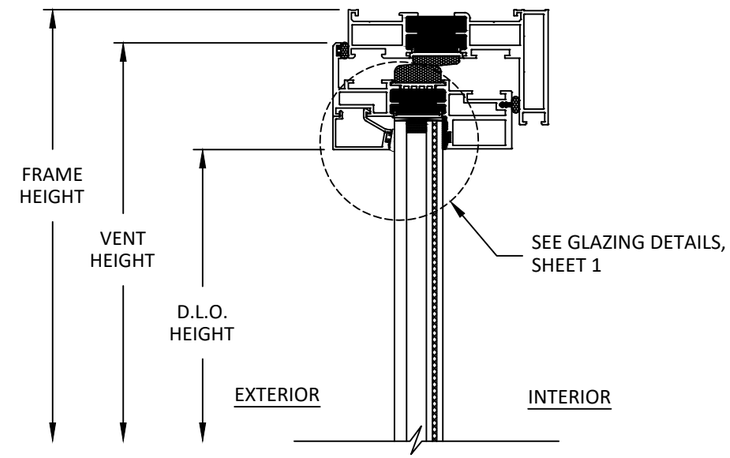

B/4 VERTICAL SECTION
FINLESS

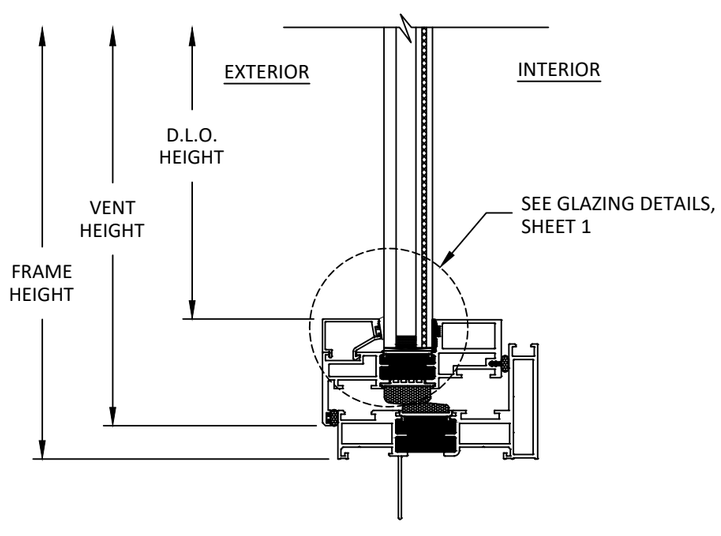

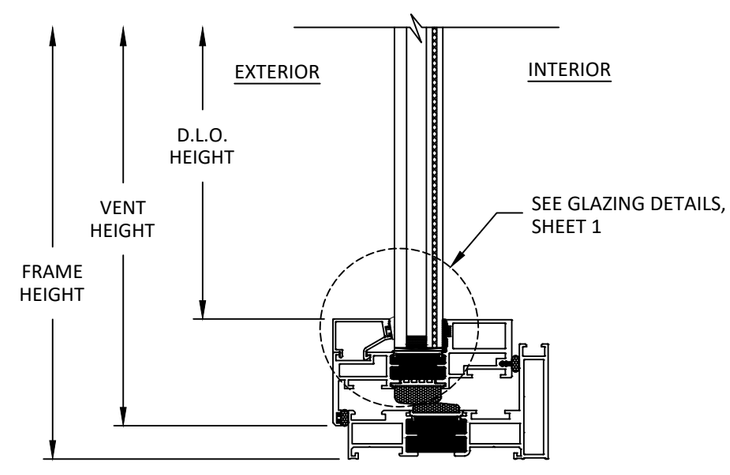

QUAKER COMMERCIAL
PO BOX 128
504 HIGHWAY 63 SOUTH
FREEBURG, MO 65035
PH: (573) 744-5211 FX: (573) 744-5822

TITLE: *C700/C705 SERIES ONE-TONE AWNING WINDOW (WZ3)(IMPACT)*
VERTICAL SECTIONS

PREPARED BY:
BUILDING DROPS, INC.
1900 NE MIAMI COURT, STE. 2-15
MIAMI, FL 33132
PH: (954)399-8478
FAX: (954)744.4738
WEB: www.buildingdrops.com

REMARKS	BY	DATE

THE INSTALLATION DETAILS DESCRIBED HEREIN ARE GENERIC AND MAY NOT REFLECT ACTUAL CONDITIONS FOR A SPECIFIC SITE. IF SITE CONDITIONS CAUSE INSTALLATION TO DEVIATE FROM THE REQUIREMENTS DETAILED HEREIN, A LICENSED ENGINEER OR ARCHITECT SHALL PREPARE SITE SPECIFIC DOCUMENTS FOR USE WITH THIS DOCUMENT.

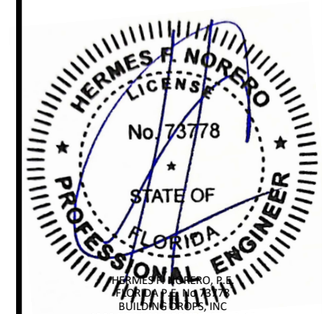

HERMES F. NORERO, P.E.
FLORIDA P.E. No. 73778
BUILDING DROPS, INC
1900 NE MIAMI COURT, STE. 2-15
MIAMI, FL 33132
FBPE CERT. OF AUTHORIZATION No. 29578

FL #: FL47696

DATE: 06.29.2025

DWG. BY: SH | CHK. BY: HFN

SCALE: NTS

DWG. #: QWP027

SHEET: 4 OF 6

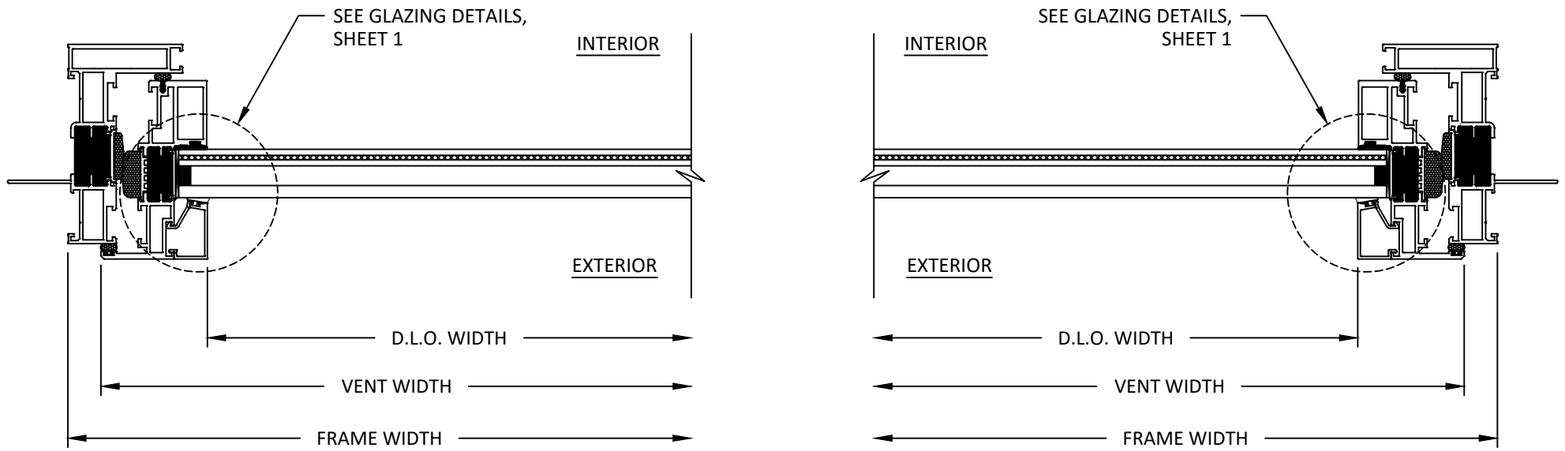

C/5 HORIZONTAL SECTION

FIN

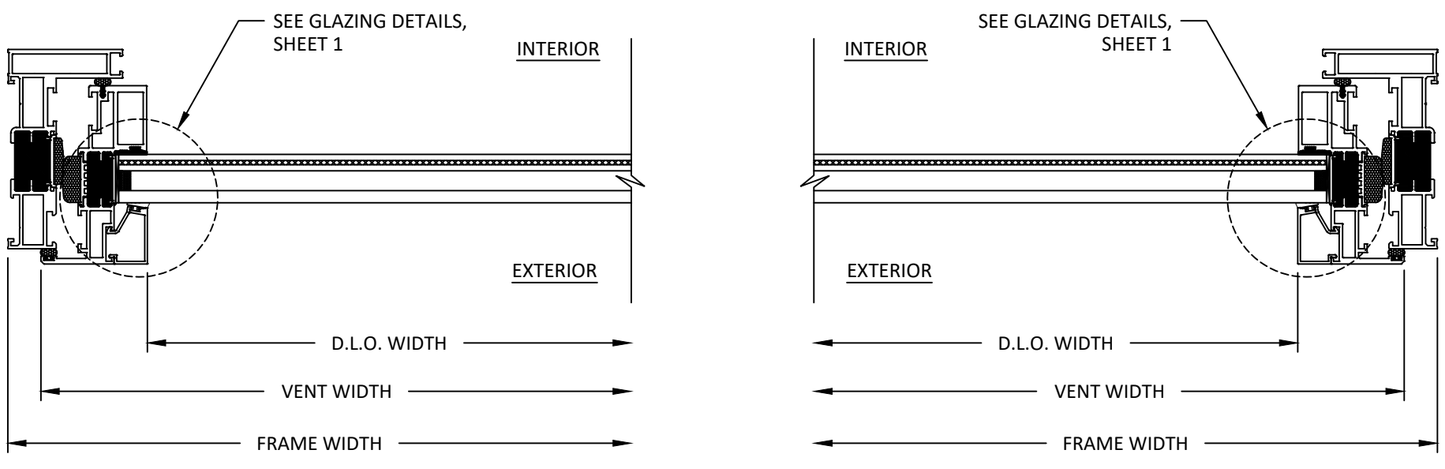

D/5 HORIZONTAL SECTION

FINLESS

QUAKER COMMERCIAL
PO BOX 128
504 HIGHWAY 63 SOUTH
FREEBURG, MO 65035
PH: (573) 744-5211 FX: (573) 744-5822

TITLE: *C700/C705 SERIES ONE-TONE AWNING WINDOW (WZ3)(IMPACT)*

HORIZONTAL SECTIONS

PREPARED BY:
BUILDING DROPS, INC.
1900 NE MIAMI COURT, STE. 2-15
MIAMI, FL 33132
PH: (954)399-8478
FAX: (954)744.4738
WEB: www.buildingdrops.com

REMARKS	BY	DATE

THE INSTALLATION DETAILS DESCRIBED HEREIN ARE GENERIC AND MAY NOT REFLECT ACTUAL CONDITIONS FOR A SPECIFIC SITE. IF SITE CONDITIONS CAUSE INSTALLATION TO DEVIATE FROM THE REQUIREMENTS DETAILED HEREIN, A LICENSED ENGINEER OR ARCHITECT SHALL PREPARE SITE SPECIFIC DOCUMENTS FOR USE WITH THIS DOCUMENT.

HERMES F. NORERO LICENSE No. 73778 STATE OF FLORIDA PROFESSIONAL ENGINEER

HERMES F. NORERO, P.E.
FLORIDA P.E. No. 73778
BUILDING DROPS, INC
1900 NE MIAMI COURT, STE. 2-15
MIAMI, FL 33132
FBPE CERT. OF AUTHORIZATION No. 29578

FL #: FL47696

DATE: 06.29.2025

DWG. BY: SH | CHK. BY: HFN

SCALE: NTS

DWG. #: QWP027

SHEET: 5 OF 6

8/11/2025 9:12 AM
c:\users\sebastianherreros\building drops, inc\building drops landing - common\projects\quaker window products\fbc-25-0533.2 - fbc submittal - c700, c705 & w700,w705 aluminum awning window\dwgs\qwp027.dwg

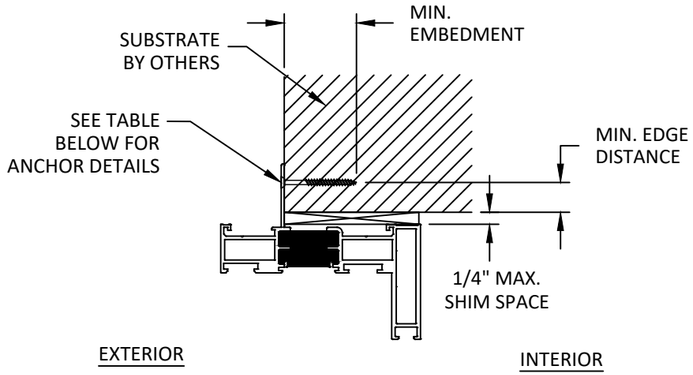

A
6

VERTICAL SECTION

HEAD
NAIL FIN

NOTE: JAMB & SILL SIMILAR

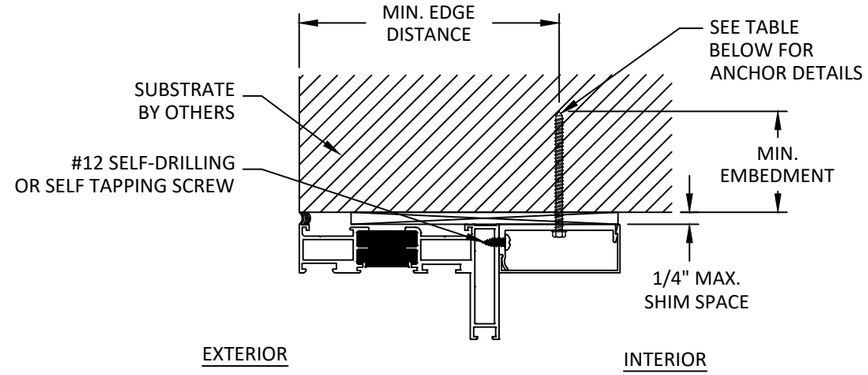

B
6

VERTICAL SECTION

HEAD
TRIM CLIP

NOTE: JAMB & SILL SIMILAR

INSTALLATION NOTES:

1. ONE (1) INSTALLATION ANCHOR IS REQUIRED AT EACH ANCHOR LOCATION SHOWN, UNLESS OTHERWISE STATED ON SHEET 3.
2. INSTALL INDIVIDUAL INSTALLATION ANCHORS WITHIN A TOLERANCE OF ±1/4 INCH THE DEPICTED LOCATION & SPACING IN THE ANCHOR LAYOUT DETAILS (I.E., WITHOUT CONSIDERATION OF TOLERANCES). TOLERANCES ARE NOT CUMULATIVE FROM ONE INSTALLATION ANCHOR TO THE NEXT.
3. SHIM AS REQUIRED AT EACH INSTALLATION ANCHOR WITH LOAD BEARING SHIM(S). MAXIMUM ALLOWABLE SHIM STACK TO BE 1/4 INCH. SHIM WHERE SPACE OF 1/16 INCH OR GREATER OCCURS. SHIM(S) SHALL BE CONSTRUCTED OF HIGH DENSITY PLASTIC OR BETTER.
4. MINIMUM EMBEDMENT AND EDGE DISTANCE EXCLUDE WALL FINISHES, INCLUDING BUT NOT LIMITED TO STUCCO, FOAM, BRICK VENEER, AND SIDING.
5. INSTALLATION ANCHORS AND ASSOCIATED HARDWARE MUST BE MADE OF CORROSION RESISTANT MATERIAL OR HAVE A CORROSION RESISTANT COATING.
6. FOR MASONRY OR CONCRETE OPENINGS, A 1X WOOD BUCK MAY BE USED (OPTIONAL) AS LONG AS THE MINIMUM EMBEDMENT AND EDGE DISTANCE REQUIREMENTS ARE STILL MET WITHIN THE CORRESPONDING HOST SUBSTRATE. SEE GENERAL NOTE #3 ON SHEET 1 FOR MORE INFORMATION.
7. FOR HOLLOW BLOCK AND GROUT FILLED BLOCK, DO NOT INSTALL INSTALLATION ANCHORS INTO MORTAR JOINTS. EDGE DISTANCE IS MEASURED FROM FREE EDGE OF BLOCK OR EDGE OF MORTAR JOINT INTO FACE SHELL OF BLOCK.
8. INSTALLATION ANCHORS SHALL BE INSTALLED IN ACCORDANCE WITH ANCHOR MANUFACTURER'S INSTALLATION INSTRUCTIONS, AND ANCHORS SHALL NOT BE USED IN SUBSTRATES WITH STRENGTHS LESS THAN THE MINIMUM STRENGTH SPECIFIED BY THE ANCHOR MANUFACTURER.

ANCHOR SCHEDULE

METHOD	SUBSTRATE	ANCHOR TYPE	MIN. EMBEDMENT	MIN. EDGE DISTANCE
NAIL FIN	WOOD: MIN. SG = 0.55	#12 WOOD SCREW	1.50"	0.75"
	METAL: 18 GAUGE STEEL, MIN. Fy = 33KSI ALUMINUM: 1/8" MIN., 6063-T5	#12 SELF-DRILLING SCREW	3 THREADS MIN. PENETRATION BEYOND STRUCTURE	0.50"
TRIM CLIP	WOOD: MIN. SG = 0.55	#12 WOOD SCREW	1.50"	0.75"
	METAL: 18 GAUGE STEEL, MIN. Fy = 33KSI ALUMINUM: 1/8" MIN., 6063-T5	#12 SELF-DRILLING SCREW	3 THREADS MIN. PENETRATION BEYOND STRUCTURE	0.50"
	CONCRETE: f'c=3000 PSI MIN.	1/4" ITW TAPCON	1.75"	2.50"
	MASONRY: CMU per ASTM C90 2000 PSI MIN.		1.00"	2.50"

QUAKER
COMMERCIAL
PO BOX 128
504 HIGHWAY 63 SOUTH
FREEBURG, MO 65035
PH: (573) 744-5211 FX: (573) 744-5822

TITLE: *C700/C705 SERIES ONE-TONE AWNING WINDOW (WZ3)(IMPACT)*
ANCHOR DETAILS & INSTALLATION NOTES

PREPARED BY:
BUILDING DROPS, INC.
1900 NE MIAMI COURT, STE. 2-15
MIAMI, FL 33132
PH: (954)399-8478
FAX: (954)744.4738
WEB: www.buildingdrops.com
BUILDING DROPS

REMARKS	BY	DATE

THE INSTALLATION DETAILS DESCRIBED HEREIN ARE GENERIC AND MAY NOT REFLECT ACTUAL CONDITIONS FOR A SPECIFIC SITE. IF SITE CONDITIONS CAUSE INSTALLATION TO DEVIATE FROM THE REQUIREMENTS DETAILED HEREIN, A LICENSED ENGINEER OR ARCHITECT SHALL PREPARE SITE SPECIFIC DOCUMENTS FOR USE WITH THIS DOCUMENT.

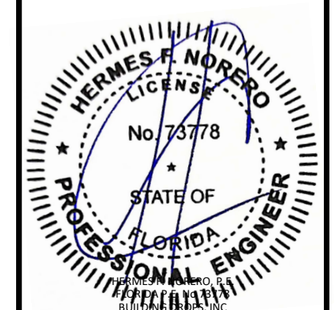

HERMES F. NORERO, P.E.
FLORIDA P.E. No. 73778
BUILDING DROPS, INC
1900 NE MIAMI COURT, STE. 2-15
MIAMI, FL 33132
FBPE CERT. OF AUTHORIZATION No. 29578

FL #: FL47696

DATE: 06.29.2025

DWG. BY: SH | CHK. BY: HFN

SCALE: NTS

DWG. #: QWP027

SHEET: 6 OF 6

8/11/2025 9:12 AM
c:\users\sebastianherreros\building drops, inc\building drops landing - common\projects\quaker window products\fbc-25-0533.2 - fbc submittal - c700, c705 & w700,w705 aluminum awning window\dwgs\qwp027.dwg